Work Order ID 74646

Tuesday, October 04, 2011 1:53:06 PM

Item ID: D350-748-101
Revision ID: U/R
Item Name: Crosstube Installation, High Fwd

Start Date: 10/4/2011 **Start Qty:** 1.00
Required Date: 11/4/2011 **Req'd Qty:** 1.00
Reference:

Accept

Setup Start
Stop

Cust Item ID:
Customer:

Run Start
Stop

Approvals: **Process Plan:** MC **Date:** 11-10-04 **Tooling:** **Date:**
QC: **Date:** **SPC (Y/N):** **Date:**

Sequence ID/ Work Center ID	Operation Description	Set Up/ Run Hours	Tool ID	Tool #	Plan Code	Accept Qty	Reject Qty	Reject Number	Insp. Stamp
Draw Nbr	**Revision Nbr**								
D350-748-141	F U/R OK CP 11.10.04								
100	DOCUMENT CONTROL	0.00							
DC	**Memo**	0.00							
Document Control	Photocopy bluefile & type labels per PPPD350-748-101				CHG002				
110	BENDING MACHINE - CROSSTUBES	0.00							
CNC Bend 1	**Memo**	0.00							
CNC Delta 100 Bender	Bend tube as per Dwg D350-748-141 using CNC bender program D350F and Folio FT_____								
120	QC15- Crosstube Dimensional Check	0.00							
QC	**Memo**	0.00							
Quality Control									

11-11-04 (1)

DP 11-10-4

Dillolot

Dart Aerospace Ltd

W/O:		WORK ORDER CHANGES					
DATE	STEP	PROCEDURE CHANGE	By	Date	Qty	Approval Chief Eng / Prod Mgr	Approval QC Inspector

Part No: _____ **PAR #:** _____ **Fault Category:** _____ **NCR:** Yes No **DQA:** _____ **Date:** _____

Resolution: _____ **Disposition:** _____ **QA: N/C Closed:** _____ **Date:** _____

NCR:		WORK ORDER NON-CONFORMANCE (NCR)						
DATE	STEP	Description of NC Section A	Corrective Action Section B			Verification Section C	Approval Chief Eng	Approval QC Inspector
			Initial Chief Eng	Action Description Chief Eng	Sign & Date			

NOTE: Date & initial all entries

H:\fFORMS\Quality Assurance\approved QA\NCRWO RevE

Work Order ID 74646

Tuesday, October 04, 2011 1:53:06 PM

Item ID: D350-748-101
Revision ID: U/R
Item Name: Crosstube Installation, High Fwd

Accept

Setup Start
Stop

Start Date: 10/4/2011 **Start Qty:** 1.00
Required Date: 11/4/2011 **Req'd Qty:** 1.00
Reference: .

Cust Item ID:
Customer:

Approvals: **Process Plan:** _____ **Date:** _____ **Tooling:** _____ **Date:** _____
QC: _____ **Date:** _____ **SPC (Y/N):** _____ **Date:** _____

Run Start
Stop

Sequence ID/ Work Center ID	Operation Description	Set Up/ Run Hours	Tool ID	Tool #	Plan Code	Accept Qty	Reject Qty	Reject Number	Insp. Stamp
125		0.00							
HandFXtube	**Memo**	0.00				1	SAO 11-10-04		
Hand Finishing Crosstubes	***Stress relief*** Heat treat crosstube as per QSI010 4.3 Temp: 375° Start time: 4h45 Finish time: 8h45								
127	QC6- Inspect dimensions to drawing	0.00							
QC	**Memo**	0.00				20			
Quality Control	(twist is Lower)								

S Nicolas

Dart Aerospace Ltd

W/O:		WORK ORDER CHANGES					
DATE	STEP	PROCEDURE CHANGE	By	Date	Qty	Approval Chief Eng / Prod Mgr	Approval QC Inspector

Part No: _____ **PAR #:** _____ **Fault Category:** _____ **NCR:** Yes No **DQA:** _____ **Date:** _____

Resolution: _____ **Disposition:** _____ **QA: N/C Closed:** _____ **Date:** _____

NCR:		WORK ORDER NON-CONFORMANCE (NCR)						
DATE	STEP	Description of NC Section A	Corrective Action Section B			Verification Section C	Approval Chief Eng	Approval QC Inspector
			Initial Chief Eng	Action Description Chief Eng	Sign & Date			

NOTE: Date & initial all entries

H:\IFORMS\Quality Assurance\approved QA\NCRWO RevE

Work Order ID 74646

Tuesday, October 04, 2011 1:53:06 PM

Item ID: D350-748-101 **Accept** **Setup Start** **Stop**

Revision ID: U/R

Item Name: Crosstube Installation, High Fwd

Start Date: 10/4/2011 **Start Qty:** 1.00 **Cust Item ID:**

Required Date: 11/4/2011 **Req'd Qty:** 1.00 **Customer:**

Reference:

Approvals: **Process Plan:** _____ **Date:** _____ **Tooling:** _____ **Date:** _____ **Run Start**

QC: _____ **Date:** _____ **SPC (Y/N):** _____ **Date:** _____ **Stop**

Sequence ID/ Work Center ID	Operation Description	Set Up/ Run Hours	Tool ID	Tool #	Plan Code	Accept Qty	Reject Qty	Reject Number	Insp. Stamp
130		0.00							
Crosstubes	Crosstubes								
Crosstubes	**Memo**	0.00							
	1-Drill Tube as per Dwg D350-748-141 Using DT8876 A,B &C Drill Jigs, Set-up drill table as per QSI 010								
	2-Deburr								
	3-Engrave Part # and Batch # as per Dwg D350-748-141								
	4-Remove all marks from tube within limits of D350-748-141								
	5- Apply a light coat of LPS3 on the interior of tube Batch: M109956								
140	QC5- Inspect part completeness to step on W/O	0.00							
QC	**Memo**	0.00							
Quality Control	CHECK 10 DEG HOLES WITH DT8876E (EUROCOPTER CLAMP)								

11-10-05

MO/AW 11-10-07

8 11/10/07

Dart Aerospace Ltd

W/O:		WORK ORDER CHANGES					
DATE	STEP	PROCEDURE CHANGE	By	Date	Qty	Approval Chief Eng / Prod Mgr	Approval QC Inspector

Part No: _____ **PAR #:** _____ **Fault Category:** _____ **NCR:** Yes No **DQA:** _____ **Date:** _____

Resolution: _____ **Disposition:** _____ **QA: N/C Closed:** _____ **Date:** _____

NCR:		WORK ORDER NON-CONFORMANCE (NCR)						
DATE	STEP	Description of NC Section A	Corrective Action Section B			Verification Section C	Approval Chief Eng	Approval QC Inspector
			Initial Chief Eng	Action Description Chief Eng	Sign & Date			

NOTE: Date & initial all entries

H:\fFORMS\Quality Assurance\approved QA\NCRWO RevE

Work Order ID 74646

Tuesday, October 04, 2011 1:53:06 PM

Item ID: D350-748-101 **Accept** **Setup Start** **Stop**

Revision ID: U/R

Item Name: Crosstube Installation, High Fwd

Start Date: 10/4/2011 **Start Qty:** 1.00 **Cust Item ID:**

Required Date: 11/4/2011 **Req'd Qty:** 1.00 **Customer:**

Reference:

Approvals: **Process Plan:** _____ **Date:** _____ **Tooling:** _____ **Date:** _____ **Run Start** **Stop**

QC: _____ **Date:** _____ **SPC (Y/N):** _____ **Date:** _____

Sequence ID/ Work Center ID	Operation Description	Set Up/ Run Hours	Tool ID	Tool #	Plan Code	Accept Qty	Reject Qty	Reject Number	Insp. Stamp
150	Outsource process-Cadplate per QSI017 4.1.9.1	0.00							
Outsource3	**Memo**	0.00							
Outsource process - Cad plate	Issue P/O: 15117 Stress relief at 375° for 5 hours Magnetic Particle Inspect per ASTM E1444 Cadium Plate per AMS-QQ-P-416B, Class 1, Type 2 Embrittle relief at 375° for 8 hours, Chromate Treat Possibe Supplier: Southwest United Industries Ensure Certificate of Conformity is attached							11-10-11	
160	Receive & Inspect for Damage & Mat'l Certs	0.00							
Packaging	**Memo**	0.00							
Packaging	Ensure certificate of conformity is attached								
170	QC5- Inspect part completeness to step on W/O	0.00							
QC	**Memo**	0.00							
Quality Control									

SEE W/O CHG

POSITIVE RECALL

EFFECTIVE 11.10.04 AUTH CP

RELEASED 11.11.04 DATE CP

11-11-03

issue P/O to Acuren as per QSF 038

rec'd + inspect + attached full report to W/O

P/O: 15359

11/11/03 ①

Dart Aerospace Ltd

W/O:		WORK ORDER CHANGES					
DATE	STEP	PROCEDURE CHANGE	By	Date	Qty	Approval Chief Eng / Prod Mgr	Approval QC Inspector
11.10.04	161	LOAD TUBE TO 3500 lb FOR 1 minute. REF D.S. EMAIL				11.10.04 QS1 042	11/11/03
11.10.04	162	NDT inspect tube				11.10.02 QS1 042	11/11/03

Part No: _____ **PAR #:** _____ **Fault Category:** _____ **NCR:** Yes No **DQA:** _____ **Date:** _____

Resolution: _____ **Disposition:** _____ **QA: N/C Closed:** _____ **Date:** _____

NCR:		WORK ORDER NON-CONFORMANCE (NCR)						
DATE	STEP	Description of NC Section A	Corrective Action Section B			Verification Section C	Approval Chief Eng	Approval QC Inspector
			Initial Chief Eng	Action Description Chief Eng	Sign & Date			

NOTE: Date & initial all entries

H:\fFORMS\Quality Assurance\approved QA\NCRWO RevE

Dart Aerospace Ltd

W/O: 74646

WORK ORDER CHANGES

DATE	STEP	PROCEDURE CHANGE	By	Date	Qty	Approval Chief Eng / Prod Mgr	Approval QC Inspector
11.10.05	161	LOAD TUBE TO 3500 lb FOR 1 MINUTE. REF D.S. EMAIL. BN 74646	GP	11.11.01	1	GP 11.11.01 QS1042	
11.10.05	162	NDT TUBE.				GP 11.11.01 QS1042	

Part No: D350-748-101 PAR #: _____ Fault Category: _____ NCR: Yes No DQA: _____ Date: _____

Resolution: _____ Disposition: _____ QA: N/C Closed: _____ Date: _____

NCR:

WORK ORDER NON-CONFORMANCE (NCR)

DATE	STEP	Description of NC Section A	Corrective Action Section B: Initial Chief Eng	Action Description Chief Eng	Sign & Date	Verification Section C	Approval Chief Eng	Approval QC Inspector

NOTE: Date & initial all entries

H:\fFORMS\Quality Assurance\approved QA\NCRWO RevE

Chris Provencal

From: David Shepherd <dshepherd@dartaero.com>
Sent: Tuesday, April 27, 2010 3:40 PM
To: 'Mike Petsche'
Cc: 'Bill Beckett'; 'L Lacelle'; 'Chris Provencal'; 'Dan Stow'; ssheldon@dartaero.com
Subject: 350 crosstubes

Mike,

I discussed the 350 crosstube load testing with Bill a little while ago and this plan makes sense to him.

So, my recommendation to clear these crosstubes is to load the fwd crosstubes to 3500 lb and the aft crosstubes to 3000 lb in the deflection test rig and document on the work orders that this test has been completed. Hold max load for 1 minute. Per TP-D350-748-2, these loads represent the maximum load on these crosstubes at gross weight and are below the yield point of the material. I would like to request that Chris Provencal witness these tests and sign off the work orders based on his experience with Dart landing gears. My feeling is that if there is a problem with the parts, it will manifest itself during this load test. I, for one, would feel a lot more confident in testing each crosstube in this manner than relying totally on what Exova has to say. I think it would be very difficult to reach a conclusion on the whole batch on the basis of cracks in two parts from the batch.

I believe that we can accomplish this before next Friday, which also gives us time to hear what Exova has to say in case it has an impact on our decision. So far, what I have seen from Exova shows me that there are fluctuations in the heat treating but the tubes are heat treated to our specification.

For this reason, I believe we should tell DHS that it looks like we will be able to start shipping 350 crosstubes by May 7th pending a successful Engineering test of the material.

David.

Work Order ID 74646

Tuesday, October 04, 2011 1:53:06 PM

Item ID: D350-748-101 **Accept** **Setup Start**

Revision ID: U/R **Stop**

Item Name: Crosstube Installation, High Fwd

Start Date: 10/4/2011 **Start Qty:** 1.00 **Cust Item ID:**

Required Date: 11/4/2011 **Req'd Qty:** 1.00 **Customer:**

Reference:

Run Start

Approvals: **Process Plan:** _____ **Date:** _____ **Tooling:** _____ **Date:** _____

Stop

QC: _____ **Date:** _____ **SPC (Y/N):** _____ **Date:** _____

Sequence ID/ Work Center ID	Operation Description	Set Up/ Run Hours	Tool ID	Tool #	Plan Code	Accept Qty	Reject Qty	Reject Number	Insp. Stamp
180	SprayPaint	0.00							
SprayPaint									
Spray Painting	**Memo**	0.00							
	1-Prime inside crosstube as per QSI 005 4.2 2-Prime Outside of Tube as per Dart QSI 005 4.2								
190	QC14- Inspect Spray Paint	0.00							
QC									
Quality Control	**Memo**	0.00							
	Then,Wrap in plastic bag to protect from scratches								
200	Crosstubes	0.00							
Crosstubes									
Crosstubes	**Memo**	0.00							
	1-Install Ground wire Insert,then insert screw and washer 2-Install Abraision strips as per Dwg D350-748-141 & QSI 035. 3-Install supports Using Dt8876 as per Dwg D350-748-141,Torque to 60-80 IN-LBS								

180 — SprayPaint: 11-11-03

190 — QC: 11-11-04 (1)

200 — Crosstubes: 11-11-04

Dart Aerospace Ltd

W/O:		WORK ORDER CHANGES					
DATE	STEP	PROCEDURE CHANGE	By	Date	Qty	Approval Chief Eng / Prod Mgr	Approval QC Inspector

Part No: _____ **PAR #:** _____ **Fault Category:** _____ **NCR:** Yes No **DQA:** _____ **Date:** _____

Resolution: _____ **Disposition:** _____ **QA: N/C Closed:** _____ **Date:** _____

NCR:		WORK ORDER NON-CONFORMANCE (NCR)						
DATE	STEP	Description of NC Section A	Corrective Action Section B			Verification Section C	Approval Chief Eng	Approval QC Inspector
			Initial Chief Eng	Action Description Chief Eng	Sign & Date			

NOTE: Date & initial all entries

H:\fFORMS\Quality Assurance\approved QA\NCRWO RevE

Work Order ID 74646

Tuesday, October 04, 2011 1:53:06 PM

Item ID: D350-748-101
Revision ID: U/R
Item Name: Crosstube Installation, High Fwd

Accept

Setup **Start**
Stop

Start Date: 10/4/2011 **Start Qty:** 1.00
Required Date: 11/4/2011 **Req'd Qty:** 1.00
Reference:

Cust Item ID:
Customer:

Run **Start**
Stop

Approvals: **Process Plan:** _____ **Date:** _____ **Tooling:** _____ **Date:** _____
QC: _____ **Date:** _____ **SPC (Y/N):** _____ **Date:** _____

Sequence ID/ Work Center ID	Operation Description	Set Up/ Run Hours	Tool ID	Tool #	Plan Code	Accept Qty	Reject Qty	Reject Number	Insp. Stamp
210	QC5- Inspect part completeness to step on W/O	0.00							
QC	**Memo**	0.00					11	- 11 -	04 (1)
Quality Control									
220	Pick Kit	0.00							
Packaging	**Memo**	0.00							
Packaging									
230	QC4- 100% Inspect kits for completeness	0.00							
QC	**Memo**	0.00					11	- 11 -	04 (1)
Quality Control									

Dart Aerospace Ltd

W/O:		WORK ORDER CHANGES					
DATE	STEP	PROCEDURE CHANGE	By	Date	Qty	Approval Chief Eng / Prod Mgr	Approval QC Inspector

Part No: _____ **PAR #:** _____ **Fault Category:** _____ **NCR:** Yes No **DQA:** _____ **Date:** _____

Resolution: _____ **Disposition:** _____ **QA: N/C Closed:** _____ **Date:** _____

NCR:		WORK ORDER NON-CONFORMANCE (NCR)						
DATE	STEP	Description of NC Section A	Corrective Action Section B			Verification Section C	Approval Chief Eng	Approval QC Inspector
			Initial Chief Eng	Action Description Chief Eng	Sign & Date			

NOTE: Date & initial all entries

H:\fFORMS\Quality Assurance\approved QA\NCRWO RevE

Work Order ID 74646

Tuesday, October 04, 2011 1:53:06 PM

Item ID: D350-748-101
Revision ID: U/R
Item Name: Crosstube Installation, High Fwd

Accept

Setup Start
Stop

Start Date: 10/4/2011 **Start Qty:** 1.00
Required Date: 11/4/2011 **Req'd Qty:** 1.00
Reference:

Cust Item ID:
Customer:

Approvals: **Process Plan:** _____ **Date:** _____ **Tooling:** _____ **Date:** _____
QC: _____ **Date:** _____ **SPC (Y/N):** _____ **Date:** _____

Run Start
Stop

Sequence ID/ Work Center ID	Operation Description	Set Up/ Run Hours	Tool ID	Tool #	Plan Code	Accept Qty	Reject Qty	Reject Number	Insp. Stamp
240		0.00							
Packaging	Packaging								
Packaging	**Memo**	0.00							
Packaging	Identify and pack for shipping as per PPP D350-748-101 Location:_____ PPP Rev:_____								
250	QC21- Final Inspection - Work Order Release	0.00							
QC	**Memo**	0.00							
Quality Control									

MF 11-11-04

Dart Aerospace Ltd

W/O:		WORK ORDER CHANGES					
DATE	STEP	PROCEDURE CHANGE	By	Date	Qty	Approval Chief Eng / Prod Mgr	Approval QC Inspector

Part No: _____ **PAR #:** _____ **Fault Category:** _____ **NCR:** Yes No **DQA:** _____ **Date:** _____

Resolution: _____ **Disposition:** _____ **QA: N/C Closed:** _____ **Date:** _____

NCR:		WORK ORDER NON-CONFORMANCE (NCR)						
DATE	STEP	Description of NC Section A	Corrective Action Section B			Verification Section C	Approval Chief Eng	Approval QC Inspector
			Initial Chief Eng	Action Description Chief Eng	Sign & Date			

NOTE: Date & initial all entries

H:\fFORMS\Quality Assurance\approved QA\NCRWO RevE

Picklist Print

Tuesday, October 04, 2011 1:52:58 PM

Work Order ID: 74646

Parent Item: D350-748-101

Parent Item Name: Crosstube Installation, High Fwd

Start Date: 10/4/2011 **Required Date:** 11/4/2011

Start Qty: 1.00 **Required Qty:** 1.00

Comments:
IPP Rev:A New Issue 06-07-05 JLM
IPP Rev:B Update qty of MS21042L5 06-09-12 KJ
IPP Rev:C Rev B 07-11-15 DD
IPP Rev D Combined manufacturing 08.04.02 EC verified by: DD
IPP Rev:E 08-06-24 revD as per dwg DD verified by:EC IPP Rev:F
10.08.04 added QSI010 4.3 DD verf:EC

Component Item ID/ Item Name	Replacement Item ID	Mfg/ Purch	Bin Item	Primary Location	Last Location	Route Seq ID	Unit of Measure	Qty on Hand	Qty per Kit	Total Qty	Qty Issued	Date Issued	Status
ALS4-1032-225 Insert		Purchased	No	118694		200	Each	1,852.000	1	1	ZT	11-11-04	
				~~B72337~~						~~SAD 11-10-04~~			

Location	Loc Qty	Loc Code
ST282	1852	
110768	62	
118386	860	
118966	930	

Component Item ID/ Item Name	Replacement Item ID	Mfg/ Purch	Bin Item	Primary Location	Last Location	Route Seq ID	Unit of Measure	Qty on Hand	Qty per Kit	Total Qty	Qty Issued	Date Issued	Status
AN4-41A Bolt		Purchased	No			220	Each	309.0000	8	8	SP 11-11-04.		

Location	Loc Qty	Loc Code
ST360	309	
115108	34	
115705	50	
116191	50	8x
117619	50	
117795	25	
118451	50	
118838	50	

Dart Aerospace Ltd

W/O:		WORK ORDER CHANGES					
DATE	STEP	PROCEDURE CHANGE	By	Date	Qty	Approval Chief Eng / Prod Mgr	Approval QC Inspector

Part No: _____ **PAR #:** _____ **Fault Category:** _____ **NCR:** Yes No **DQA:** _____ **Date:** _____

Resolution: _____ **Disposition:** _____ **QA: N/C Closed:** _____ **Date:** _____

NCR:		WORK ORDER NON-CONFORMANCE (NCR)						
DATE	STEP	Description of NC Section A	Corrective Action Section B			Verification Section C	Approval Chief Eng	Approval QC Inspector
			Initial Chief Eng	Action Description Chief Eng	Sign & Date			

NOTE: Date & initial all entries

H:\fFORMS\Quality Assurance\approved QA\NCRWO RevE

Picklist Print

Tuesday, October 04, 2011 1:52:58 PM

6

Work Order ID: 74646

Parent Item: D350-748-101

Parent Item Name: Crosstube Installation, High Fwd

Start Date: 10/4/2011 **Required Date:** 11/4/2011

Start Qty: 1.00 **Required Qty:** 1.00

AN4-6A Bolt		Purchased	No	220	Each	6,296.000	16	16	SP 11-11-04

Location		Loc Qty	Loc Code	
ST356		1290		
	117872	90		
	118422	300		
	~~118628~~	400		16x
	118838	300		
	119127	200		
ST358		6		
	117514	6		
ST516		5000		
	119017	5000		

AN5-32A Bolt		Purchased	No	220	Each	183.0000	4	4	SP 11-11-04

Location		Loc Qty	Loc Code	
ST339		75		
	118628	50		
	118983	25		
ST340		108		
	117872	58		
	118422	50		4x

AN960JD10 Washer	NAS1149D0363J	Purchased	No	200 118612	Each	0.0000	1	1	SP 11-11-04
AN960JD416 Washer	NAS1149D0463J	Purchased	No	220	Each	0.0000	32	32	119097 SP 11-11-04

Dart Aerospace Ltd

W/O:		WORK ORDER CHANGES					
DATE	STEP	PROCEDURE CHANGE	By	Date	Qty	Approval Chief Eng / Prod Mgr	Approval QC Inspector

Part No: _____ **PAR #:** _____ **Fault Category:** _____ **NCR:** Yes No **DQA:** _____ **Date:** _____

Resolution: _____ **Disposition:** _____ **QA: N/C Closed:** _____ **Date:** _____

NCR:		WORK ORDER NON-CONFORMANCE (NCR)						
DATE	STEP	Description of NC Section A	Corrective Action Section B			Verification Section C	Approval Chief Eng	Approval QC Inspector
			Initial Chief Eng	Action Description Chief Eng	Sign & Date			

NOTE: Date & initial all entries

H:\FORMS\Quality Assurance\approved QA\NCRWO RevE

Picklist Print

Tuesday, October 04, 2011 1:52:59 PM

Work Order ID: 74646

Parent Item: D350-748-101

Parent Item Name: Crosstube Installation, High Fwd

Start Date: 10/4/2011 **Required Date:** 11/4/2011

Start Qty: 1.00 **Required Qty:** 1.00

AN960JD516	NAS1149D0563J	Purchased	No	220	Each	0.0000	8	8		
Washer										
D2856-400		Manufactured	No	200	f	373.3845	1.181	1.243158		
Abraison Strip										

Location	Loc Qty	Loc Code
ST403	0.3149	
68076	0.3149	
ST409	373.0696	
63735	0.6696	
71164	156.4	
73491	216	

D3500-1		Manufactured	No	220	Each	28.0000	4	4		
Saddle										

Location	Loc Qty	Loc Code
ST424	21	
66127	9	
68947	12	
ST424/25	7	
62207	7	

D3501-1		Manufactured	No	220	Each	245.0000	16	16		
Bushing										

Location	Loc Qty	Loc Code
ST063	202	
68939	102	
70682	100	
ST066	43	
67757	43	

Dart Aerospace Ltd

W/O:		WORK ORDER CHANGES					
DATE	STEP	PROCEDURE CHANGE	By	Date	Qty	Approval Chief Eng / Prod Mgr	Approval QC Inspector

Part No: _____ **PAR #:** _____ **Fault Category:** _____ **NCR:** Yes No **DQA:** _____ **Date:** _____

Resolution: _____ **Disposition:** _____ **QA: N/C Closed:** _____ **Date:** _____

NCR:		WORK ORDER NON-CONFORMANCE (NCR)						
DATE	STEP	Description of NC Section A	Corrective Action Section B			Verification Section C	Approval Chief Eng	Approval QC Inspector
			Initial Chief Eng	Action Description Chief Eng	Sign & Date			

NOTE: Date & initial all entries

H:\fFORMS\Quality Assurance\approved QA\NCRWO RevE

Picklist Print

Tuesday, October 04, 2011 1:53:00 PM

6

Work Order ID: 74646

Parent Item: D350-748-101

Parent Item Name: Crosstube Installation, High Fwd

Start Date: 10/4/2011 **Required Date:** 11/4/2011

Start Qty: 1.00 **Required Qty:** 1.00

D3502-1	Manufactured	No	200	Each	63.0000	2	2	RT 11-11-04
Support								

Location	Loc Qty	Loc Code	
ST063	63		
61206	7		
64004	10		
68951	12		X2
72129	14		
73419	20		

D350-748-141TRN	Manufactured	No	110	Each	4.0000	1	1	SAD 11-10-04
Crosstube Turning Detail								

Location	Loc Qty	Loc Code	
LG	4		
72337	1		1
72812	1		
72815	1		
72817	1		

Dart Aerospace Ltd

W/O:		WORK ORDER CHANGES					
DATE	STEP	PROCEDURE CHANGE	By	Date	Qty	Approval Chief Eng / Prod Mgr	Approval QC Inspector

Part No: _____ **PAR #:** _____ **Fault Category:** _____ **NCR:** Yes No **DQA:** _____ **Date:** _____

Resolution: _____ **Disposition:** _____ **QA: N/C Closed:** _____ **Date:** _____

NCR:		WORK ORDER NON-CONFORMANCE (NCR)						
DATE	STEP	Description of NC Section A	Corrective Action Section B			Verification Section C	Approval Chief Eng	Approval QC Inspector
			Initial Chief Eng	Action Description Chief Eng	Sign & Date			

NOTE: Date & initial all entries

H:\fFORMS\Quality Assurance\approved QA\NCRWO RevE

Picklist Print

Tuesday, October 04, 2011 1:53:00 PM

Work Order ID: 74646

Parent Item: D350-748-101

Parent Item Name: Crosstube Installation, High Fwd

Start Date: 10/4/2011 **Required Date:** 11/4/2011

Start Qty: 1.00 **Required Qty:** 1.00

MS21042L4	Purchased	No	220	Each	14,769.00	24	24	
Nut								SP 11-11-04

Location		Loc Qty	Loc Code	
ST300		3769		
	117441	51		
	117601	637		
	117885	81		
	118451	2000		24x
	118927	1000		
ST516		6000		
	119017	6000		
ST518		5000		
	119075	5000		

MS21042L5	Purchased	No	220	Each	2,684.000	4	4	
Nut								SP 11-11-04.

Location		Loc Qty	Loc Code	
ST300		1184		
	116105	5		
	116548	53		
	117441	248		
	117611	82		
	118179	496		
	118910	300		4X.
ST518		1500		
	119109	1500		

Dart Aerospace Ltd

W/O:		WORK ORDER CHANGES					
DATE	STEP	PROCEDURE CHANGE	By	Date	Qty	Approval Chief Eng / Prod Mgr	Approval QC Inspector

Part No: _____ **PAR #:** _____ **Fault Category:** _____ **NCR:** Yes No **DQA:** _____ **Date:** _____

Resolution: _____ **Disposition:** _____ **QA: N/C Closed:** _____ **Date:** _____

NCR:		WORK ORDER NON-CONFORMANCE (NCR)						
DATE	STEP	Description of NC Section A	Corrective Action Section B			Verification Section C	Approval Chief Eng	Approval QC Inspector
			Initial Chief Eng	Action Description Chief Eng	Sign & Date			

NOTE: Date & initial all entries

H:\fFORMS\Quality Assurance\approved QA\NCRWO RevE

Picklist Print

Tuesday, October 04, 2011 1:53:00 PM

Work Order ID: 74646

Parent Item: D350-748-101

Parent Item Name: Crosstube Installation, High Fwd

Start Date: 10/4/2011 **Required Date:** 11/4/2011

Start Qty: 1.00 **Required Qty:** 1.00

MS21920-20	Purchased	No	200	Each	62.0000	2	2	RT 11-11-04

Clamp (per MIL-DTL-8783C)

Location		Loc Qty	Loc Code	
LG050		62		
	116799	10		
	118236	6		
	118649	46		x2

MS27039-1-10	Purchased	No	200	Each	215.0000	1	1	RT 11-11-04

Screw

Location		Loc Qty	Loc Code	
ST290		15		
	117441	15		
ST291		200		
	118612	200		x1

Dart Aerospace Ltd

W/O:		WORK ORDER CHANGES					
DATE	STEP	PROCEDURE CHANGE	By	Date	Qty	Approval Chief Eng / Prod Mgr	Approval QC Inspector

Part No: _____ **PAR #:** _____ **Fault Category:** _____ **NCR:** Yes No **DQA:** _____ **Date:** _____

Resolution: _____ **Disposition:** _____ **QA: N/C Closed:** _____ **Date:** _____

NCR:		WORK ORDER NON-CONFORMANCE (NCR)						
DATE	STEP	Description of NC Section A	Corrective Action Section B			Verification Section C	Approval Chief Eng	Approval QC Inspector
			Initial Chief Eng	Action Description Chief Eng	Sign & Date			

NOTE: Date & initial all entries

H:\FORMS\Quality Assurance\approved QA\NCRWO RevE

DART AEROSPACE LTD	Work Order:	
Description: Crosstube High Fwd (AS350/355)	**Part Number:**	D350-748-101
Inspection Dwg: D350-748-141 **Rev:** E CP 11/11/04		Page 1 of 1

Required Dimension	Min	Max
Height	23.13	23.37
1/2 Span	40.78	41.02
Angle	75	77
Total Span	81.56	82.04

.278 ÷ 4.354
6.3%

.233 ÷ 4.393
5.3%

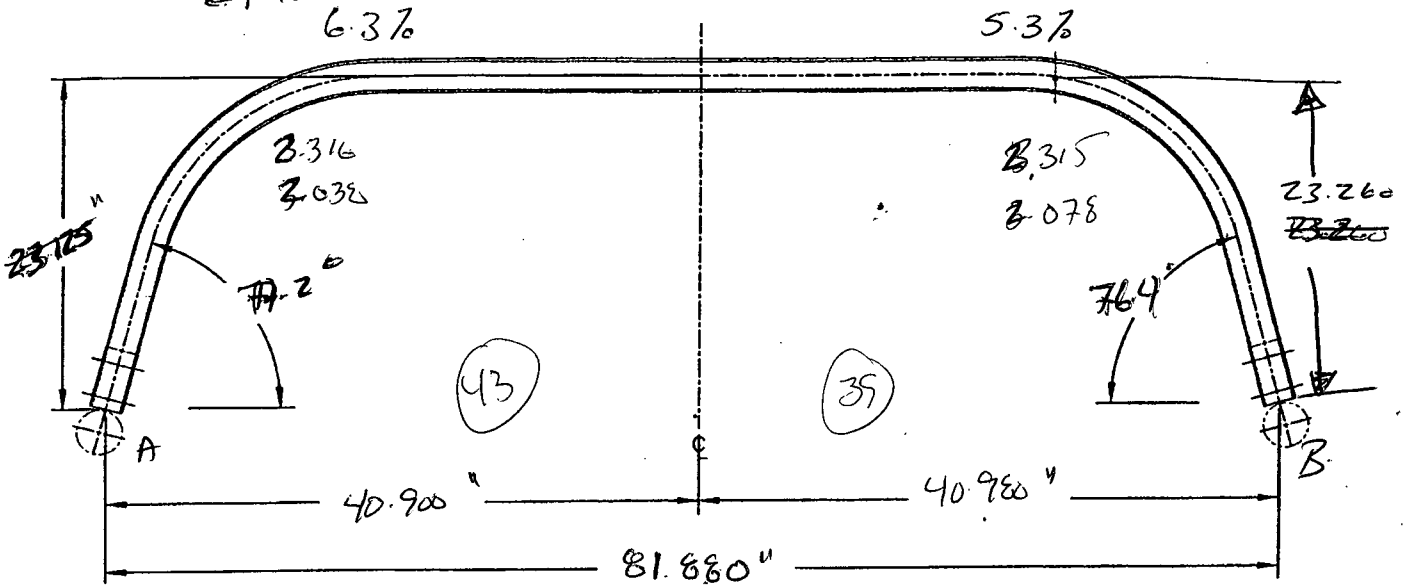

Comments
Twist = 0.211"
Side A = 6.3% crushi @ 43 passes.
Side B = 5.3% crushing @ 39 passes
Crushing high, height low. CP 11.10.04 CP 11.04

QC15 Inspection	
Date	11/10/04

Rev	Date	Change	Revised by	Approved
A	07.02.06	New Issue	KJ/JM	
B	10.08.23	Dwg Rev updated	KJ	2023

DART AEROSPACE LTD	Work Order:	78646
Description: Crosstube High Fwd (AS350/355)	**Part Number:**	**D350-748-101**
Inspection Dwg: D350-748-141 **Rev:** E		**Page 1 of 1**

Required Dimension	Min	Max
Height	23.13	23.37
1/2 Span	40.78	41.02
Angle	75	77
Total Span	81.56	82.04

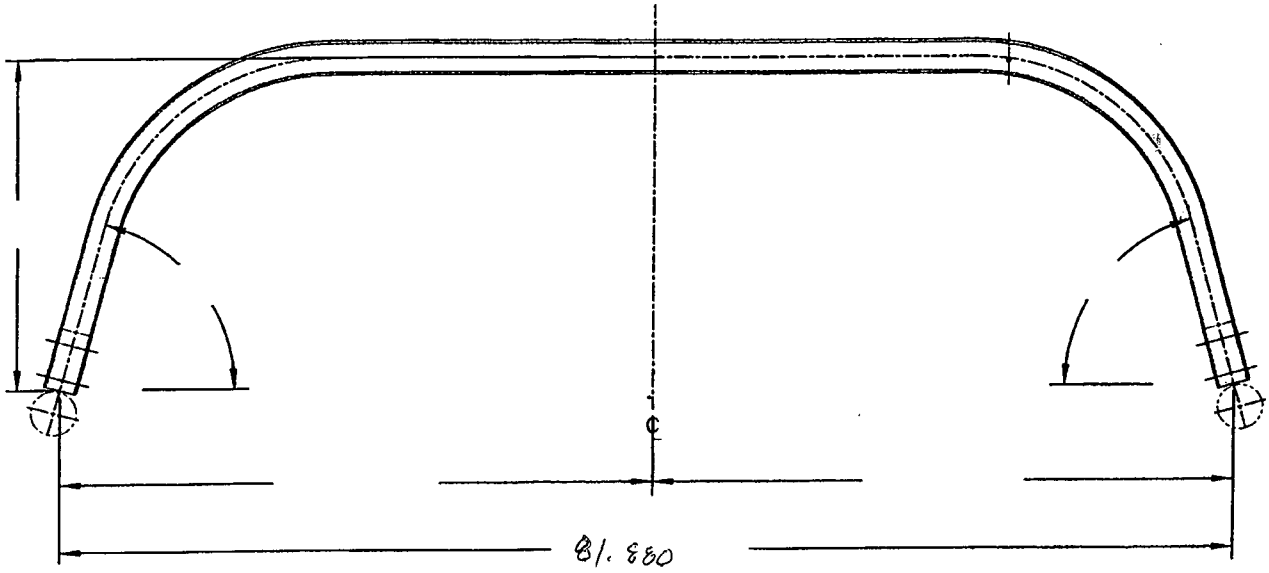

For stress Relief only

Comments
twist = 0.189

QC15 Inspection	δ
Date	11/10/05

Rev	Date	Change	Revised by	Approved
A	07.02.06	New Issue	KJ/JM	
B	10.08.23	Dwg Rev updated	KJ	10.08.23

Item	Qty -141	Part Number	Description
1	X	D350-748-141	CROSSTUBE ASSEMBLY (AS 350/355 HI FWD)
2	1	D6015-125	CROSSTUBE (OR D6017-115)
3	2	D3502-1	SUPPORT
4	2	D2856-400-710	ABRASION STRIP
5	1	AELS-1032-225	INSERT
6	1	NAS1149D0363J	WASHER (OR AN960JD10)
7	2	MS21920-20	CLAMP (PER DART SPEC. M-MS21920-20)
8	1	MS27039-1-10	SCREW

GENERAL NOTES:

1) MATERIAL: MANUFACTURED FROM D6015-125 OR D6017-115
   FINISHED LENGTH = 110.270±0.06
2) FINISH: MAGNETIC PARTICLE INSPECT PER DART QSI 038 4.2
   CADMIUM PLATE PER AMS-QQ-P-416B, CLASS 1, TYPE II
   PRIME INSIDE AND OUTSIDE PER DART QSI 005 4.2
   PAINT OUTSIDE PER DART QSI 005 4.2
3) TOLERANCES ARE PER DART QSI 018 UNLESS OTHERWISE NOTED.
4) UNITS: INCHES UNLESS OTHERWISE NOTED.
5) BREAK SHARP EDGES: 0.005 TO 0.010 MAX.
6) IDENTIFICATION: DART PART NUMBER "D350-748-141" AND BATCH NUMBER ON INSIDE OF CUFF PER DART QSI 044 6.4 (VIBRATING STYLUS)
7) WEIGHT: 30.45 lbs
8) PART IS SYMMETRIC ABOUT CENTERLINE, EXCEPT FOR Ø0.297 HOLE.
9) BLEND OUT ALL EDGES FROM MACHINING LONGITUDINALY, TRANSITION SHOULD BE SMOOTH. NOTE: ALL HOLES ARE DRILLED AFTER BENDING.
10) BEND PROGRESSIVELY WITH A MINIMUM OF 7 PASSES. MAXIMUM TUBE FLATTENING DUE TO BENDING IS 6% BASED ON O.D.
11) HEAT TREAT TO MIN. 180 KSI PER MIL-T-6736 OR AMS 2759-1C AFTER TURNING. ACCEPTABLE TO VERIFY TENSILE STRENGTH BY HARDNESS TEST PER ASTM E18 TO 40-45 HRC.
12) INSTALL D2856-400-710 ABRASION STRIPS WITH A GAP ON BOTTOM SIDE OF CROSSTUBE, CENTERED OPPOSITE D3502-1 SUPPORT, PER QSI 035.
13) EXTREME CARE MUST BE TAKEN TO PROTECT THE OUTSIDE SURFACE OF THE TUBE. THE OUTSIDE SURFACE MUST BE SMOOTH AND FREE FROM SURFACE DEFECTS SUCH AS SCRATCHES, NICKS, OR DENTS. DEFECTS UP TO 0.005" MAY BE BLENDED OUT LONGITUDINALLY. CIRCUMFERENTIAL GRIND MARKS ARE UNACCEPTABLE. WHEN DRILLING HOLES EXTREME CARE MUST BE TAKEN AND CAREFUL DEBURRING PERFORMED TO ENSURE A CLEAN HOLE WITH NO CRACKING/CHIPPING/GROOVES.
14) TORQUE CLAMPS 60 TO 80 IN-LB. ENSURE AT LEAST 1.5 THREADS SHOWING IN SAFETY AND THAT NUT HAS NOT BOTTOMED-OUT AFTER TORQUING.
15) MAX TWIST AFTER BENDING: WITH XTUBE LAYED FLAT ON SURFACE, THE DIFFERENCE BETWEEN CUFF HEIGHTS FROM THE SURFACE MAY BE NO LARGER THAN 0.25 (ZN C1-3).

UNDER REVIEW
11.07.12

RELEASED
2011-01-18

#74640

REV.	DESCRIPTION	BY	DATE
F	ADD HRC TEST OPTION (B8-1) PER PAR 09-040, ADD TWIST LIMIT (A8-1, C1-3), ADD D6015-125 OPTION (C8-1), STOCK DIM NOW MACHINED (D1-4)	CP	10.11.23
E	REVISE GENERAL NOTES; UPDATE TO CURRENT ADD STANDARDS; RELOCATED FLAG #6 PER PAR 08-046 (ZN A6-3); TOLERANCES (ZN C6-3, D1-3)	RF	09.09.30
D	MAG. PARTICLE AND CAD PLATE AS MFD.	CP	06.10.31
C	ADD CAD PLATING	CP	06.08.14
B	ADD D6017-115 & PRIME AND PAINT	CP	06.06.30
A	NEW ISSUE	CP	06.03.31

DESIGN		DART AEROSPACE LTD HAWKESBURY, ONTARIO, CANADA
DRAWN		
CHECKED		DRAWING NO. D350-748-141 — REV. F — SHEET 1 OF 4
MFG. APPR.		
APPROVED		TITLE: CROSSTUBE (AS 350/355 HI FWD) — SCALE: NTS
DE APPR.		
DATE	10.11.23	

COPYRIGHT © 2005 BY DART AEROSPACE LTD
THIS DOCUMENT IS PRIVATE AND CONFIDENTIAL AND IS SUPPLIED ON THE EXPRESS CONDITION THAT IT IS NOT TO BE USED FOR ANY PURPOSE OR COPIED OR COMMUNICATED TO ANY OTHER PERSON WITHOUT WRITTEN PERMISSION FROM DART AEROSPACE LTD.

Dart Aerospace Ltd

W/O:		WORK ORDER CHANGES					
DATE	STEP	PROCEDURE CHANGE	By	Date	Qty	Approval Chief Eng / Prod Mgr	Approval QC Inspector

Part No: _____ **PAR #:** _____ **Fault Category:** _____ **NCR:** Yes No **DQA:** _____ **Date:** _____

Resolution: _____ **Disposition:** _____ **QA: N/C Closed:** _____ **Date:** _____

NCR:		WORK ORDER NON-CONFORMANCE (NCR)						
DATE	STEP	Description of NC Section A	Corrective Action Section B			Verification Section C	Approval Chief Eng	Approval QC Inspector
			Initial Chief Eng	Action Description Chief Eng	Sign & Date			

NOTE: Date & initial all entries

H:\FORMS\Quality Assurance\approved QA\NCRWO RevE

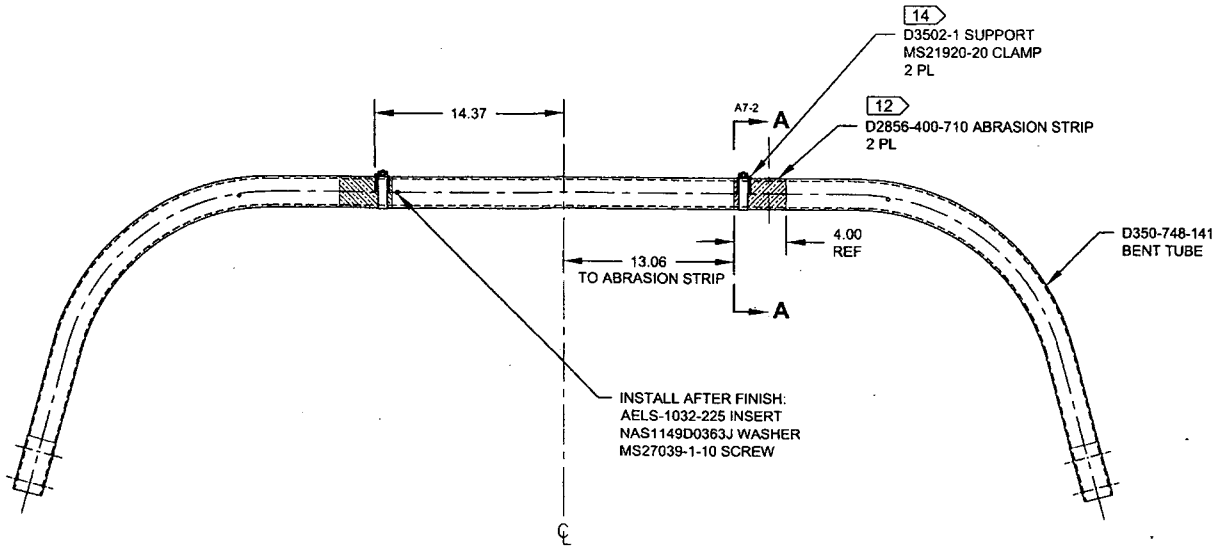

D350-748-141
ASSEMBLY DETAIL

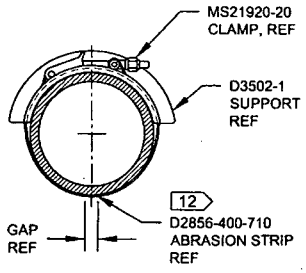

SECTION A-A D4-2
SCALE 4X

#74646

UNDER REVIEW
11.07.11

RELEASED
2011 -01- 18

DESIGN		**DART AEROSPACE LTD** HAWKESBURY, ONTARIO, CANADA
DRAWN		
CHECKED		DRAWING NO. REV. F
MFG. APPR.		D350-748-141 SHEET 2 OF 4
APPROVED		TITLE SCALE
DE APPR.		CROSSTUBE (AS 350/355 HI FWD) NTS
DATE 10.11.23		

COPYRIGHT © 2006 BY DART AEROSPACE LTD
THIS DOCUMENT IS PRIVATE AND CONFIDENTIAL AND IS SUPPLIED ON THE EXPRESS CONDITION THAT IT IS NOT TO BE USED FOR ANY PURPOSE OR COPIED OR COMMUNICATED TO ANY OTHER PERSON WITHOUT WRITTEN PERMISSION FROM DART AEROSPACE LTD.

Dart Aerospace Ltd

W/O:		WORK ORDER CHANGES					
DATE	STEP	PROCEDURE CHANGE	By	Date	Qty	Approval Chief Eng / Prod Mgr	Approval QC Inspector

Part No: _____ **PAR #:** _____ **Fault Category:** _____ **NCR:** Yes No **DQA:** _____ **Date:** _____

Resolution: _____ **Disposition:** _____ **QA: N/C Closed:** _____ **Date:** _____

NCR:		WORK ORDER NON-CONFORMANCE (NCR)						
DATE	STEP	Description of NC Section A	Corrective Action Section B			Verification Section C	Approval Chief Eng	Approval QC Inspector
			Initial Chief Eng	Action Description Chief Eng	Sign & Date			

NOTE: Date & initial all entries

H:\FORMS\Quality Assurance\approved QA\NCRWO RevE

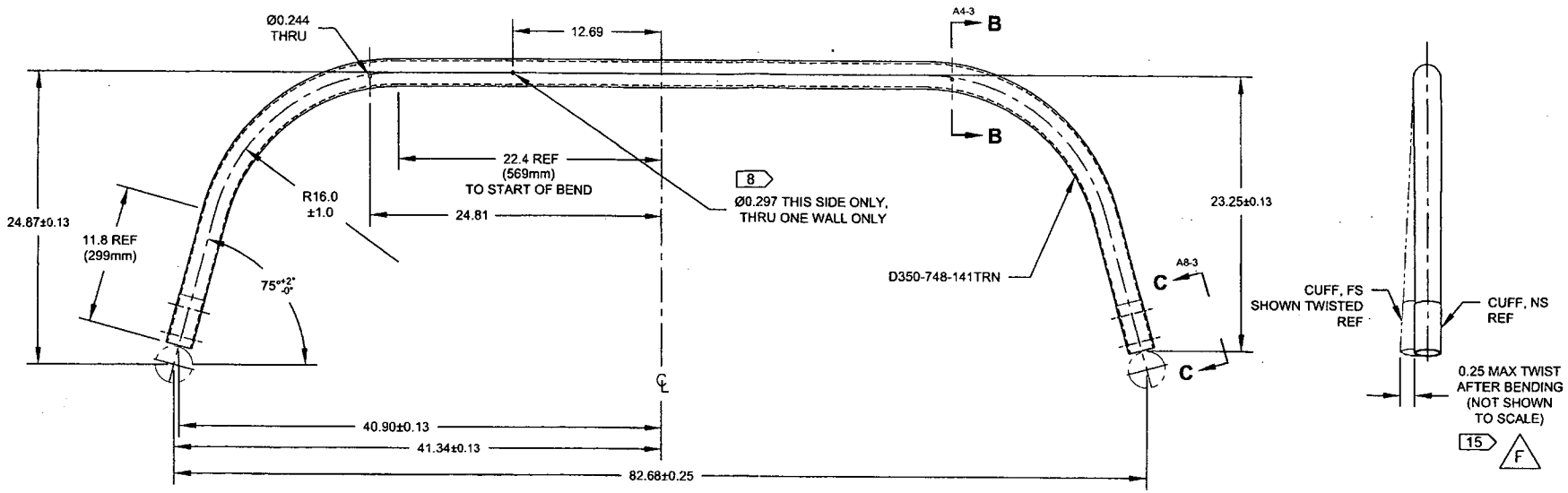

D350-748-141
BENDING AND DRILLING DETAIL 10

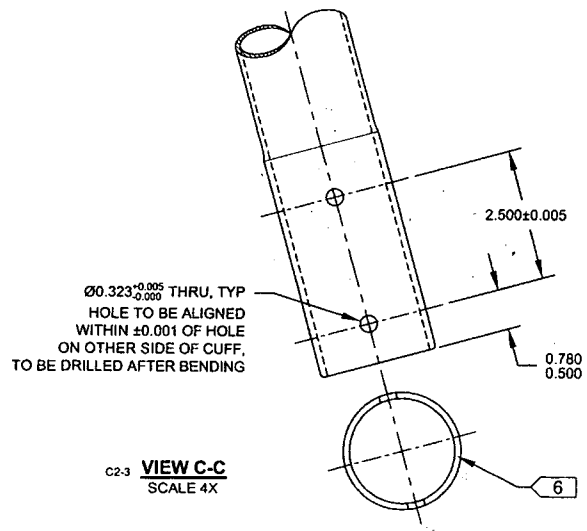

C2-3 **VIEW C-C**
SCALE 4X

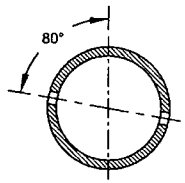

SECTION B-B D3-3
SCALE 4X

UNDER REVIEW
11.27.12

#74640

RELEASED
2011-01-18

DESIGN		**DART AEROSPACE LTD** HAWKESBURY, ONTARIO, CANADA	
DRAWN			
CHECKED		DRAWING NO. D350-748-141	REV. F SHEET 3 OF 4
MFG. APPR.			
APPROVED		TITLE CROSSTUBE (AS 350/355 HI FWD)	SCALE NTS
DE APPR.			
DATE 10.11.23			

COPYRIGHT © 2006 BY DART AEROSPACE LTD
THIS DOCUMENT IS PRIVATE AND CONFIDENTIAL AND IS SUPPLIED ON THE EXPRESS CONDITION THAT IT IS NOT TO BE USED FOR ANY PURPOSE OR COPIED OR COMMUNICATED TO ANY OTHER PERSON WITHOUT WRITTEN PERMISSION FROM DART AEROSPACE LTD.

Dart Aerospace Ltd

W/O:		WORK ORDER CHANGES					
DATE	STEP	PROCEDURE CHANGE	By	Date	Qty	Approval Chief Eng / Prod Mgr	Approval QC Inspector

Part No: _____ PAR #: _____ Fault Category: _____ NCR: Yes No DQA: _____ Date: _____

Resolution: _____ Disposition: _____ QA: N/C Closed: _____ Date: _____

NCR:		WORK ORDER NON-CONFORMANCE (NCR)						
DATE	STEP	Description of NC Section A	Corrective Action Section B			Verification Section C	Approval Chief Eng	Approval QC Inspector
			Initial Chief Eng	Action Description Chief Eng	Sign & Date			

NOTE: Date & initial all entries

H:\FORMS\Quality Assurance\approved QA\NCRWO RevE

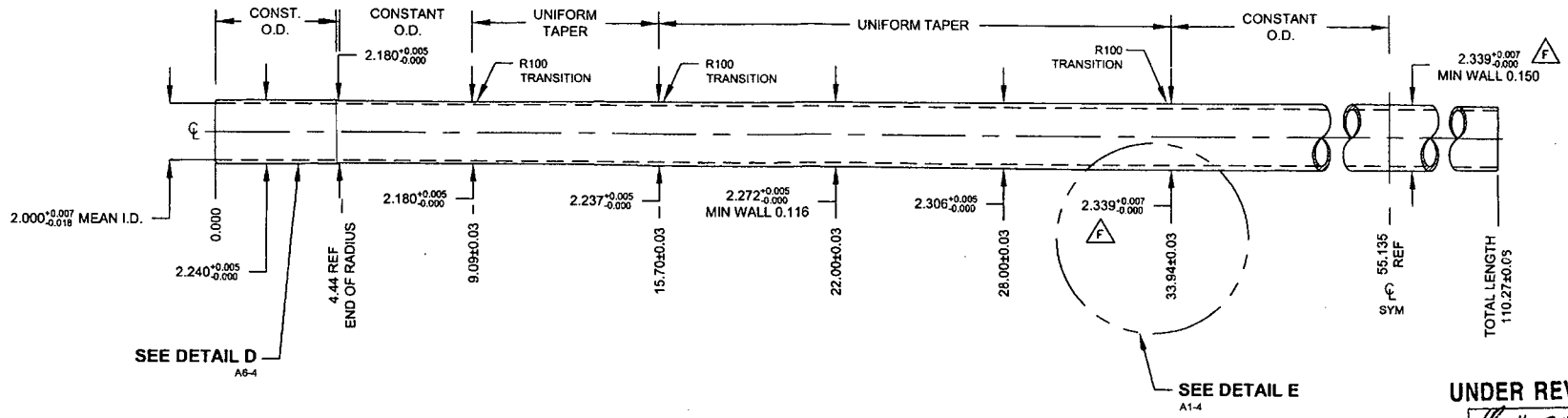

D350-748-141TRN
TURNING DETAIL

UNDER REVIEW
11.07.12

#74646

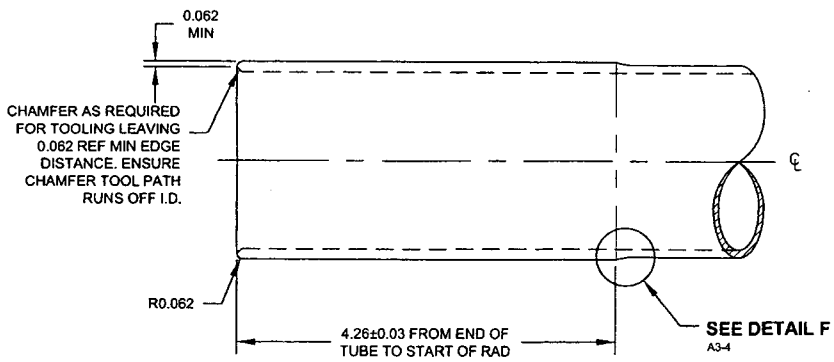

DETAIL D:
CROSSTUBE CUFF C7-4
SCALE 3X

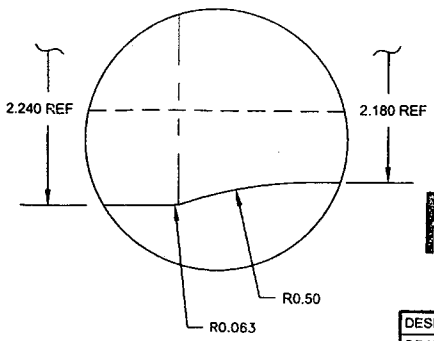

DETAIL F:
CUFF TRANSITION A5-4
NOT TO SCALE

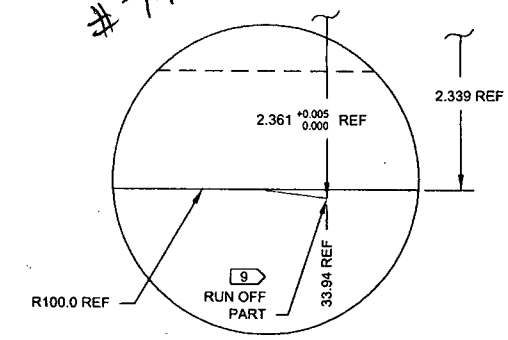

DETAIL E:
TAPER RUN-OFF C3-4
NOT TO SCALE

RELEASED
2011 -01- 18

DESIGN		**DART AEROSPACE LTD** HAWKESBURY, ONTARIO, CANADA
DRAWN		DRAWING NO. D350-748-141 — REV. F — SHEET 4 OF 4
CHECKED		TITLE: CROSSTUBE (AS 350/355 HI FWD) — SCALE: NTS
MFG. APPR.		
APPROVED		
DE APPR.		
DATE	10.11.23	

COPYRIGHT © 2006 BY DART AEROSPACE LTD
THIS DOCUMENT IS PRIVATE AND CONFIDENTIAL AND IS SUPPLIED ON THE EXPRESS CONDITION THAT IT IS NOT TO BE USED FOR ANY PURPOSE OR COPIED OR COMMUNICATED TO ANY OTHER PERSON WITHOUT WRITTEN PERMISSION FROM DART AEROSPACE LTD.

Dart Aerospace Ltd

W/O:		WORK ORDER CHANGES					
DATE	STEP	PROCEDURE CHANGE	By	Date	Qty	Approval Chief Eng / Prod Mgr	Approval QC Inspector

Part No: _____ **PAR #:** _____ **Fault Category:** _____ **NCR:** Yes No **DQA:** _____ **Date:** _____

Resolution: _____ **Disposition:** _____ **QA: N/C Closed:** _____ **Date:** _____

NCR:		WORK ORDER NON-CONFORMANCE (NCR)						
DATE	STEP	Description of NC Section A	Corrective Action Section B			Verification Section C	Approval Chief Eng	Approval QC Inspector
			Initial Chief Eng	Action Description Chief Eng	Sign & Date			

NOTE: Date & initial all entries

H:\FORMS\Quality Assurance\approved QA\NCRWO RevE

CERTIFICATE OF
CONFORMANCE

CADORATH PLATING CO. LTD.
2150 LOGAN AVENUE
WINNIPEG, MANITOBA R2J-0J1

DATE: Oct-28-2011

CONSIGNED TO: Dart Aerospace Ltd.
1270 Aberdeen St.
Hawksbury, ON K6A 1K7

W/O #: 108670

INVOICE #: 57422

CONTRACT OR
PURCHASE ORDER # 15117

DESCRIPTION: SKID

QTY 1

P/N # d350-748-101

S/N # B74646

STRESS RELIEF @ 375 DEG. 5 HRS BAKE HEAT CHART # 11-1084. MPI INSPECTED IAW ASTM-E-1444. CADMIUM PLATED IAW AMS-QQ-P-416C, TYPE 2 YELLOW, CLASS 1. HYDROGEN EMBRITTLEMENT @ 375 DEG. 8 HRS. BAKE HEAT CHART #11-1095.

CERTIFICATE: I certify that the items indicated here on have been inspected and tested and conform to all specifications and requirements detailed on the contract or purchase order.

Approved Inspector: CP 2

RAPPORT D'INSPECTION PAR RESSUAGE

P - 11134

CUREN

PAGE 1 DE 2

NT: Dart Aerospace
DATE: 3 novembre 2011 HEURE: AM ☒ PM ☐
NTION: Mme Linda Lacelle.
Nº TRAVAIL ACUREN: 188-11-02386
ESSE: 1270 Aberdeen st, Hawkesbury, Ont, K6A 1K7
Nº CLIENT PO/WO: 1153591
SITE DE TRAVAIL: Dart Usine
ACCEPTATION STD. ASTM 1417/QS1038 DATE/RÉV. 2005
JET: Crosstubes Inspection (Fluorescent Penetrant)
(S) EXAMINÉ: 12 x crosstubes (5x steel 7x Aluminium)

SCRIPTION DES TRAVAUX | Nº PROCÉDURE LT-002 DATE/RÉV. 2007 | Nº TECHNIQUE LT-002-XX DATE/RÉV. 2007

EMS: See other sheet MATÉRIEL: Steel - Aluminium ÉPAISSEUR: —
RIPTION: Inspection 100% Fluorescent on surface external on 12x crosstubes.

TAILS DES INSPECTIONS

HODE :	☑ FLUORESCENT ☐ VISIBLE	☑ LAVABLE À L'EAU ☐ MÉTHODE DISSOLVANT ☐ PRÉ-ÉMULSIONNANT	
QUE : Magnaflux		LUM. NOIRE S/N 16440 ☑ PUISS. > 1000 µ W/CM² ☐ AMBIANT < 2 fc	
ÉTRANT : Zyglo ZL 67	TEMPS PÉNÉTRATION MIN. 10 MIN.	ÉQUIP. LUMIÈRE ☐ LAMP.POCHE ☐ LAMP.CULASSE ☐ PUISS.>100 fc @ SURFACE	
OLVANT PÉNÉTRANT H20	TEMPS SÉCHAGE MIN. >10 MIN.	AUTRES Modele Labino	
ÉLATEUR SKD S2	TEMPS PÉNÉTRATION MIN. 10 MIN.	MÈTRE LUM. N/S	DATE CAL DUE
RÉVÉLATEUR	☑ NON AQUEUX ☐ AQUEUX ☐ SEC		

RFACE INSPECTÉE

DITION SURFACE	☐ MEULÉE	☐ SOUDÉE	☐ MACHINÉE	☐ GRENAILLÉE	☑ MÉTAL PROPRE
PÉRATURE SURFACE	☐ < - 4°C/ 20°F	☐ - 4°C/ 20°F DE 10°C/50°F		☑ 10°C/50°F DE 52°C/125°F	☐ > 52°C/125°F

SULTATS- (☐ MÉTRIQUE ☐ IMPÉRIAL)

See other sheet for Results

11-11-03

lue des Services

nte selon laquelle le Groupe Acuren Inc. exécute les services ne concerne que les énoncés par écrit. En aucune circonstance ces services ne s'étendent au-delà de l'exécution des services demandés. Il est entendu que toutes les ptions, les observations et les expressions d'opinions faites par Acuren reflètent les opinions ou les observations de l'entreprise fondées sur l'information et les hypothèses fournies par le propriétaire/opérateur, et elles ne constituent s déclarations ou des garanties ou ne peuvent être interprétées comme constituant. Le Groupe Acuren Inc. n'assume aucune des responsabilités du propriétaire/opérateur, et le propriétaire/opérateur conserve la responsabilité des décisions prises en matière d'ingénierie, de fabrication, de réparation et d'usage à partir de l'information ou des données fournies par Acuren en rapport avec les services décrits dans les présentes ne peuvent excéder le coût des es rendus.

e de Diligence

l'exécution des services, le Groupe Acuren Inc. applique le degré de diligence, le soin et la compétence normalement exercés dans des circonstances semblables par d'autres fournisseurs de ce type de services opérant dans la même é ou dans une localité similaire. Aucune autre garantie, implicite ou explicite, n'est faite ou voulue par le Groupe Acuren Inc.

NATURES

RÉSENTANT: Ken Tilley (MOULÉ) — Ken Tilley (SIGNATURE)

HNICIEN (SIGNATURE):

M (MOULÉ): Pierre-Luc Dubour

1ER TECHNICIEN: ONGC NIVEAU 2 SNT NIVEAU 2 ONGC Nº REG. 12205

2ÈME TECHNICIEN: ONGC NIVEAU ____ SNT NIVEAU ____ ONGC Nº REG. ____

FTJ #

RAPPORT RÉVISÉ PAR:

NOM	INITIALES

H-3044

BLANCHE – COPIE DU CLIENT JAUNE – COPIE DU BUREAU ROSE – COPIE DU TECHNICIEN OR – COPIE DU BUREAU

PT Décembre 2005

ACUREN

RAPPORT D'ESSAI NON DESTRUCTIF

(SUITE)

RAPPORT #: P 11134

CLIENT: DART AEROSPACE — DATE: 2 novembre 2011 — HEURE: ☒ AM ☐ PM

ATTENTION: Mme Linda Lucelle — NO. TRAVAIL ACUREN: 188-11-02386

RÉSULTATS: (☐ METRIQUE ☐ IMPÉRIAL)

STEEL Crosstubes:

1)	Work	order	ID	66922	Item	ID	D350-748-101		
2)	"	"	"	74646	"	"	"	"	"
3)	"	"	"	66921	"	"	"	"	"
4)	"	"	"	66924	"	"	"	"	"
5)	"	"	"	74658	"	"	"	"	"

Aluminium Crosstubes:

6)	Work	order	ID	75603	Item	ID	D 212-664-101		
7)	"	"	"	75604	"	"	"	"	"
8)	"	"	"	75800	"	"	D 212-664-207		
9)	"	"	"	75801	"	"	"	"	"
10)	"	"	"	75985	"	"	D 212-664-201		
11)	"	"	"	75417	"	"	D 412-664-203		
12)	"	"	"	75416	"	"	"	"	"

- All the Crosstubes (12) Accepted
- No linear indication as found.

Étendue des Services

L'entente selon laquelle le Groupe Acuren Inc. exécute les services ne concerne que les énoncés par écrit. En aucune circonstance ces services ne s'étendent au-delà de l'exécution des services demandés. Il est entendu que toutes les descriptions, les observations et les expressions d'opinions faites par Acuren reflètent les opinions ou les observations de l'entreprise fondées sur l'information et les hypothèses fournies par le propriétaire/opérateur, et elles ne constituent pas des déclarations ou des garanties ou ne peuvent être interprétées comme constituant. Le Groupe Acuren Inc. n'assume aucune des responsabilités du propriétaire/opérateur, et le propriétaire/opérateur conserve la responsabilité entière des décisions prises en matière d'ingénierie, de fabrication, de réparation et d'usage à partir de l'information ou des données fournies par Acuren en rapport avec les services décrits dans les présentes ne peuvent excéder le coût des services rendus.

Norme de Diligence

Dans l'exécution des services, le Groupe Acuren Inc. applique le degré de diligence, le soin et la compétence normalement exercés dans des circonstances semblables par d'autres fournisseurs de ce type de services opérant dans la même localité ou dans une localité similaire. Aucune autre garantie, implicite ou explicite, n'est faite ou voulue par le Groupe Acuren Inc.

SIGNATURES

REPRÉSENTANT À LA CLIENTÈLE: Ian Titley (MOULÉE) — SIGNATURE

TECHNICIEN (SIGNATURE)

NAME (MOULÉE): Pierre-Luc Dufour

1er TECHNICIEN — NIVEAU CGSB 2 — NIVEAU SNT 2 — NO. ENREG. CGSB 12205

2e TECHNICIEN — NIVEAU CGSB ____ — NIVEAU SNT ____ — NO. ENREG. CGSB ____

FTJ #: ____

RAPPORT REVISÉ PAR: ____ NOM ____ INITIALES

H-3050

BLANCHE – COPIE DU CLIENT JAUNE – COPIE DU BUREAU ROSE – COPIE DU TECHNICIEN OR – COPIE DU BUREAU